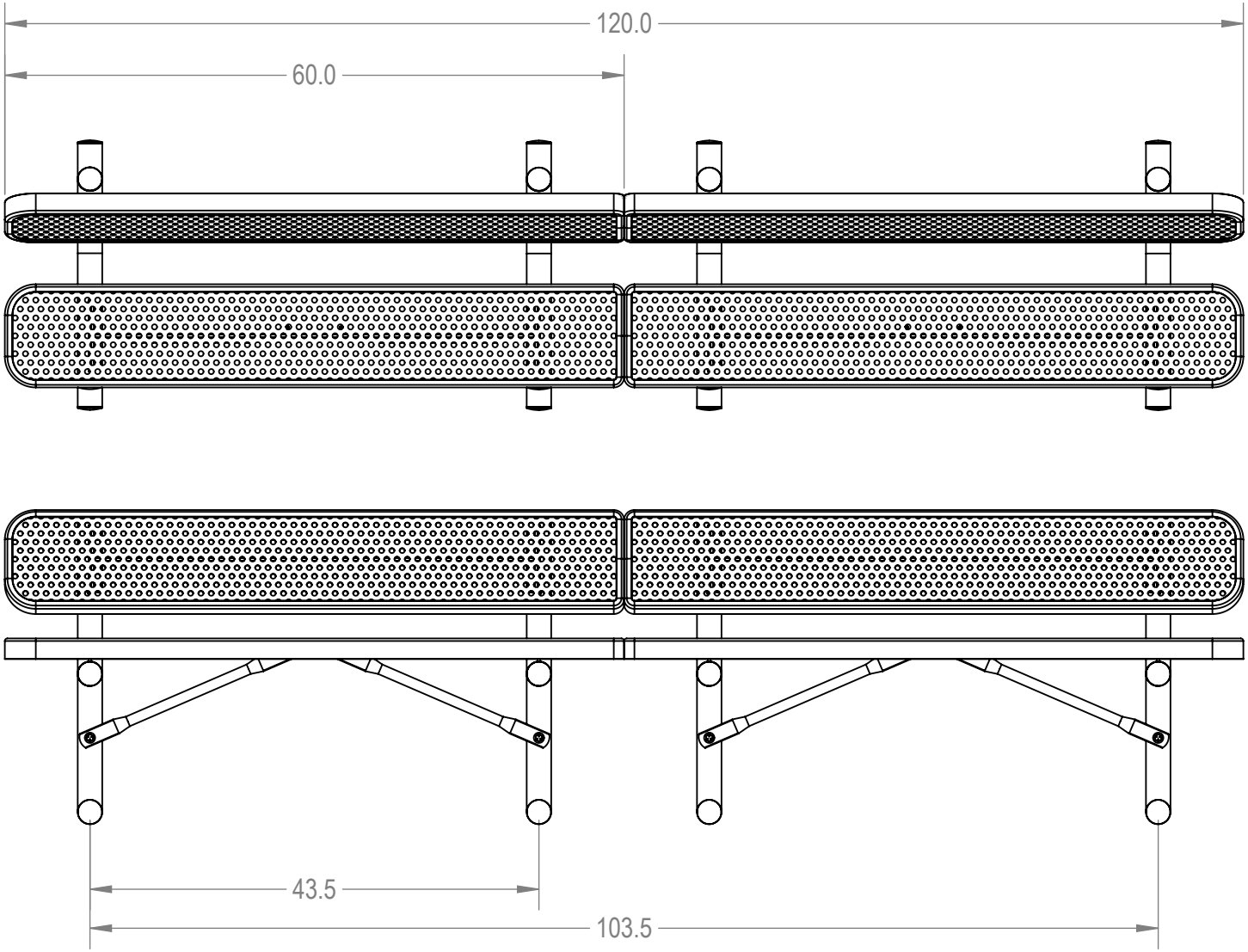

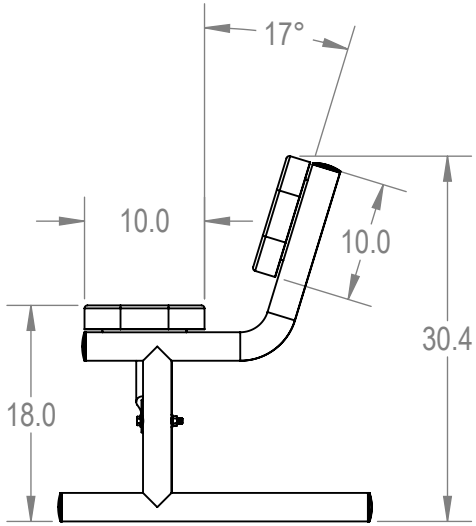

	NAME	DATE
DRAWN	GM	2/20/2016
SALES APPR.		
CLIENT APPR.		
MFG APPR.		
Q.A.		

Design By -

CADWorksPro
Chicago, IL

www.cadworkspro.com

AAdvantage Panels & Fence, Inc.

TITLE:
10' Rectangular Bench with Back - Portable

Perforated Metal Version

SIZE	DWG. NO.	REV
A	BRT10-B-18-000	
	WEIGHT:	SHEET 3 OF 3

Mfg. by Aadvantage Panels & Fence, Inc.

MYTCOAT

Commercial Outdoor Furniture

www.mytcoat.com

PROPRIETARY AND CONFIDENTIAL

THE INFORMATION CONTAINED IN THIS DRAWING IS THE SOLE PROPERTY OF Aadvantage Panels & Fence, Inc. PO Box 1790 Whitney, TX. ANY REPRODUCTION IN PART OR AS A WHOLE WITHOUT THE WRITTEN PERMISSION OF Aadvantage Panels & Fence, Inc. PO Box 1790 Whitney, TX. IS PROHIBITED.

5 4 3 2 1